LMC Series / Heat-Release LED Spacer (10/pack)

- Can lower peak heat-temperature of LED (down 7-20%)
- Can extend LED lifetime
- Material……Special PPS Black (UL94V-0)
- Heat Conductivity……5W／m・k
- Reflow……Possible
- Operating Temperature……－40～＋125˚C
- Adaptive LED……3 ϕ, 5 ϕ LED
  Pitch……2.54mm、2.5mm
  Diameter…0.5□, 0.5 ϕ, 0.6□ and below,
  0.6 ϕ and below

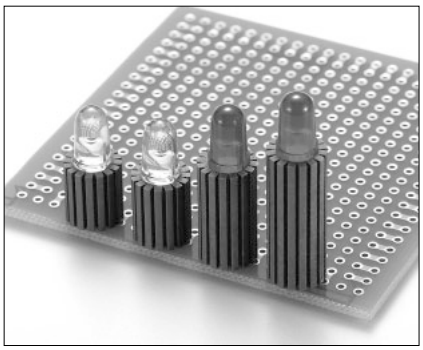

N/O	H
LMC-7	7
LMC-8	8
LMC-9	9
LMC-10	10
LMC-11	11
LMC-12	12
LMC-13	13
LMC-14	14
LMC-15	15
LMC-20	20

Dimentions

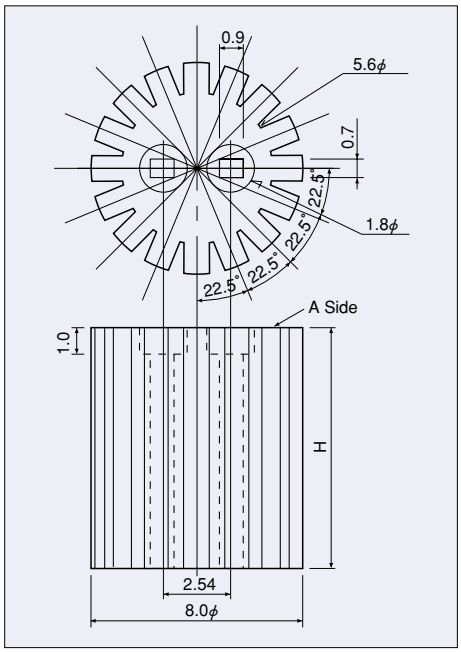

Notice:

Please insert LED from A side, and make LED contact with the Spacer

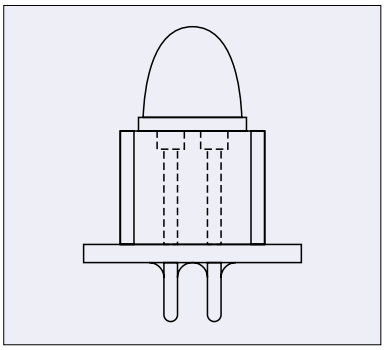

Heat-Release Test Data:

Maximum Temperature

H (mm)	No Spacer	With LMC	Difference
7	76˚C	67˚C	－ 9˚C
10	75˚C	65˚C	－10˚C
15	79˚C	65˚C	－14˚C
20	82˚C	65˚C	－17˚C

(This is reference value, not guaranteed value)

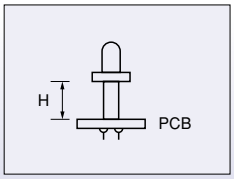

No.1 distributor of MAC8
MAC8
SHINDENKIZAI Co., LTD.
Contact
e-mail:sdk@mac8sdk.co.jp FAX:+81-3-3253-5965
http://www.mac8sdk.co.jp/index_e.html

LR Series, LW-1 / LED Spacer

Connected LED Spacer ［LR Series］（10pcs/package）

PAT

- For 3 ϕ & 5 ϕ LED
- Pitch: 2.54mm×20P
- Can make the number of connections by yourself（from 1P to 20P）
  ※Can cut it by nipper
- Can place LED vertcially and horizontally
- Can use for 2 and 3 terminal LED
- Material……PCT Plastic（UL94V-0）
- Color……Black
- Operating Temperature……−40～＋125˚C

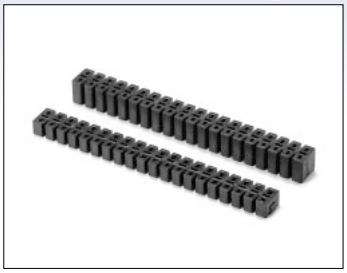

■Horizontal

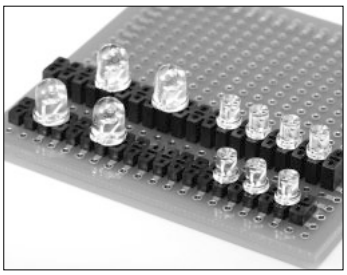

■Vertical

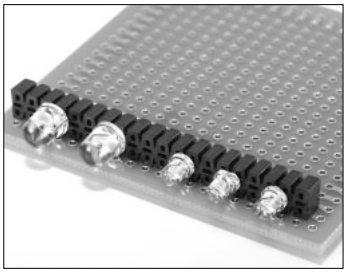

N/O	H（mm）
LR-1	1.0
LR-1.5	1.5
LR-2	2.0
LR-2.5	2.5
LR-3	3.0
LR-3.5	3.5
LR-4	4.0
LR-4.5	4.5
LR-5	5.0
LR-5.5	5.5
LR-6	6.0

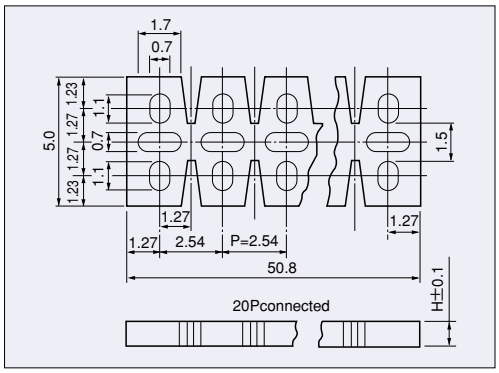

- You can order the number of connections you prefer.
  LR-6-5P

※Standard Type=20P

LED Spacer (Double type) ［LW-1］（100pcs/package）

PAT

- Can use for 3 & 5 ϕ LED
- Insert terminal of LEDs into the holes and bend them at right angle.
- Material……PBT Plastic（UL94V-0）
- Color……Black
- Operating Temparature……−40～＋125˚C
  ※You can select this triple type: LWT series

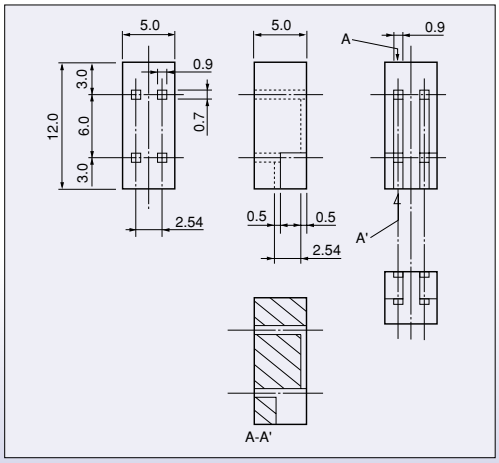

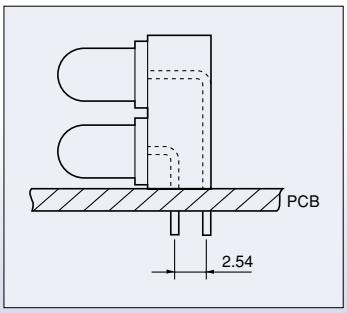

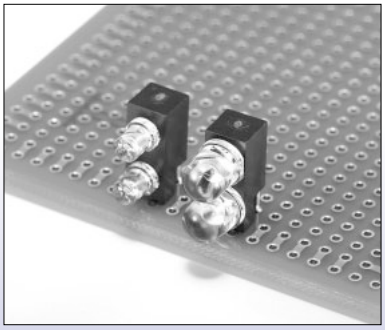

No.1 distributor of MAC8
SHINDENKIZAI Co., LTD.
Contact
e-mail：sdk@mac8sdk.co.jp FAX：+81-3-3253-5965
http://www.mac8sdk.co.jp/index_e.html